Test: Primary 5 Maths (Term 2) - ACS

Points: 49 points

Name: _____ **Score:** _____

Date: _____

Signature: _____

Select multiple choice answers with a cross or tick:

- ○ Only select one answer
- ☐ Can select multiple answers

Question 1 of 49

Primary 5 Maths (Term 2) 1 pt

7 890 021 = 7 000 000 + 800 000 + __20 +1

- ○ **A)** 9
- ○ **B)** 900
- ○ **C)** 9000
- ○ **D)** 90 000

Question 2 of 49

Primary 5 Maths (Term 2) 1 pt

When a number is rounded off to the nearest thousand, it is 57 000. What can the number be?

- ○ **A)** 56 250
- ○ **B)** 56 540
- ○ **C)** 57 520
- ○ **D)** 57 850

Question 3 of 49

Primary 5 Maths (Term 2) 1 pt

Which one of the following fractions is larger than $\frac{1}{2}$?

A) $\frac{5}{12}$

B) $\frac{4}{7}$

C) $\frac{4}{9}$

D) $\frac{2}{5}$

Question 4 of 49

Primary 5 Maths (Term 2) 1 pt

16 kg of flour were shared equally among 5 women. What was the mass of flour received by each woman?

A) $\frac{1}{5}$ kg

B) $\frac{5}{16}$ kg

C) $3\frac{1}{16}$ kg

D) $3\frac{1}{5}$ kg

Question 5 of 49

Primary 5 Maths (Term 2) 1 pt

What is the ratio of the number of circles to the number of hearts to the number of diamonds in the simplest form?

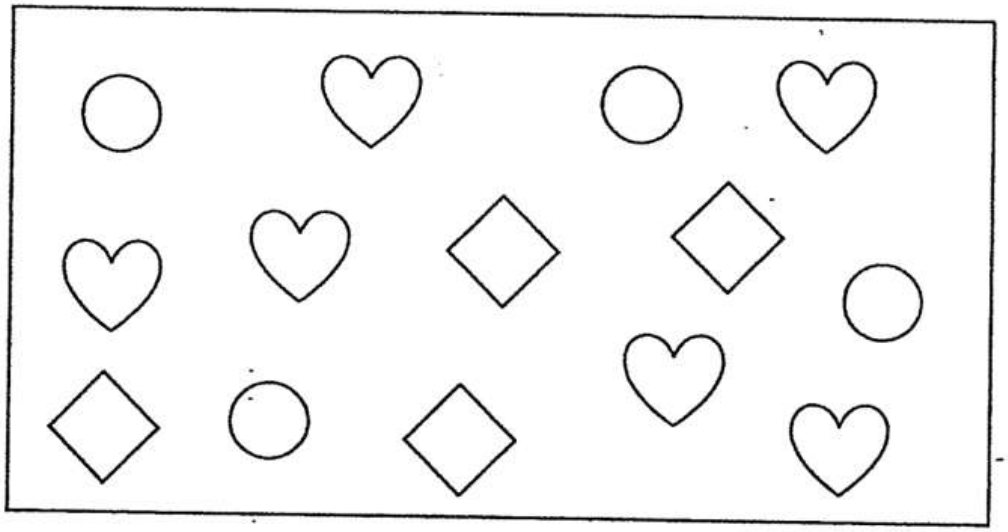

- A) 2:3:2
- B) 3:2:3
- C) 4:6:4
- D) 6:4:6

Question 6 of 49

Primary 5 Maths (Term 2) 1 pt

3600 is the same as 360 ____

- A) ones
- B) tens
- C) hundreds
- D) thousands

Question 7 of 49

Primary 5 Maths (Term 2) 1 pt

In the figure below, ABCD is a rectangle. Find the area of the shaded triangle EBC.

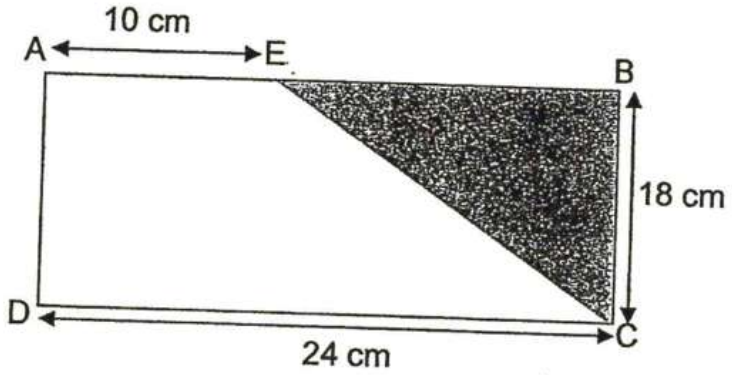

- A) 90
- B) 126
- C) 162
- D) 216

Question 8 of 49

Primary 5 Maths (Term 2) 1 pt

An oil tank contains 150L of oil. How many 250ml bottles of oil can be filled with oil from the tank

- A) 6
- B) 60
- C) 600
- D) 6000

Question 9 of 49

Primary 5 Maths (Term 2) 1 pt

Find the value of 35-(7+2)x3

- A) 8
- B) 78
- C) 90
- D) 168

Question 10 of 49

Primary 5 Maths (Term 2) 1 pt

Class A sold 1250 funfair tickets. Class A sold 50 times as mammy funfair tickets than Class B. How many funfair tickets did Class B sell?

- **A)** 25
- **B)** 250
- **C)** 6250
- **D)** 62 500

Question 11 of 49

Primary 5 Maths (Term 2) 1 pt

Kathy had a total of 300 pencils and ribbons. After selling $\frac{1}{3}$ of the pencils and $\frac{2}{3}$ of the ribbons, the number of ribbons left was twice the number pencils left. How many pencils did Kathy sell?

- **A)** 20
- **B)** 40
- **C)** 60
- **D)** 80

Question 12 of 49

Primary 5 Maths (Term 2) 1 pt

A rope was cut into 2 pieces in the ratio of 5:7. One piece was 48cm longer. What was the length of the rope before it was first cut?

- **A)** 24cm
- **B)** 120cm
- **C)** 168cm
- **D)** 288cm

Question 13 of 49

Primary 5 Maths (Term 2) 1 pt

In the figure below, triangle WYZ is made up of two smaller triangles. Find the difference in areas between triangle WXZ and triangle XYZ.

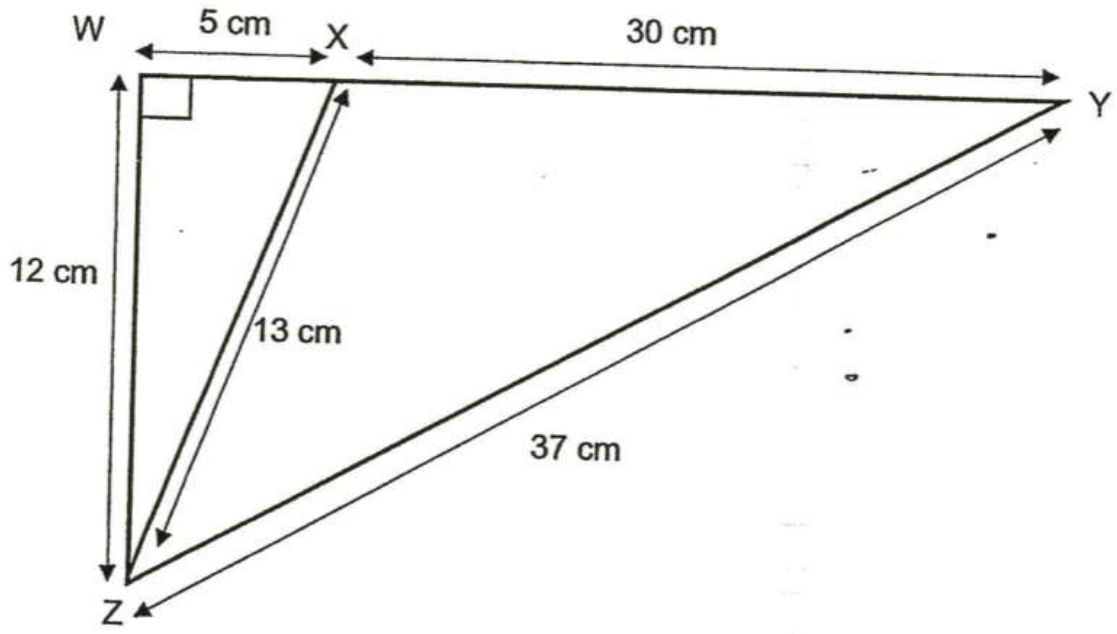

- A) 30
- B) 150
- C) 180
- D) 210

Question 14 of 49

Primary 5 Maths (Term 2) 1 pt

David had twice as much money as Bala. Bala had 3 times as much money as Ronald. What is the ratio of the amount of Ronald's money to Bala's money to David's money?

- A) 1:3:2
- B) 1:3:6
- C) 2:3:1
- D) 6:3:1

Question 15 of 49

Primary 5 Maths (Term 2) 1 pt

Mr Lim's salary is $1200. Mr Tan's salary is 4 times as much as Mr Lim's salary. What is the difference between Mr Lim and Mr Tan's salary?

- **A)** $1200
- **B)** $2400
- **C)** $3600
- **D)** $4800

Question 16 of 49

Primary 5 Maths (Term 2) 1 pt

Write 1 740 058 in words

Question 17 of 49

Primary 5 Maths (Term 2) 1 pt

$\frac{3}{4}$ of 56 is _____.

Question 18 of 49

Primary 5 Maths (Term 2) 1 pt

Find the product 720 and 60

Question 19 of 49

Primary 5 Maths (Term 2) 1 pt

2:6 = ___ :9
What is the missing number?

Question 20 of 49 Primary 5 Maths (Term 2) 1 pt

Elise had $\frac{5}{8}$ kg of butter. She used $\frac{1}{5}$ of it. How much butter had she left?

Question 21 of 49 Primary 5 Maths (Term 2) 1 pt

Find the area of the shaded part of the rectangle.

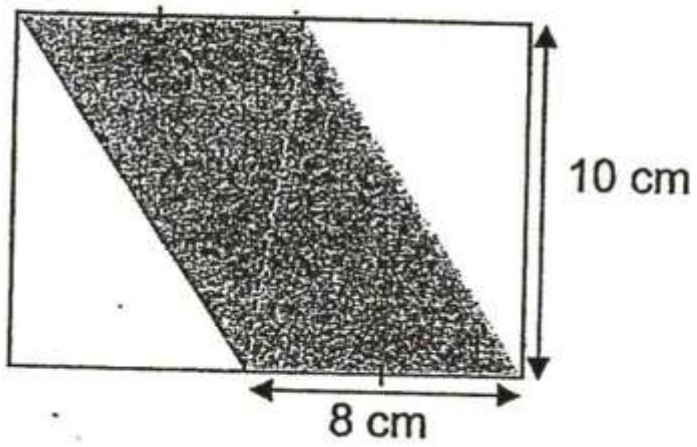

Question 22 of 49 Primary 5 Maths (Term 2) 1 pt

John bought a new computer for $1990. Bryan bought a similar computer, but paid $40 every week for 52 weeks. How much more did Bryan pay for the computer than John?

Question 23 of 49

Primary 5 Maths (Term 2) 1 pt

Find the value of 1+2+3+...+98+99+100

Question 24 of 49

Primary 5 Maths (Term 2) 1 pt

2/7 of the pupils in a school are girls. There are 1400 pupils altogether .How many more boys than girls are there?

Question 25 of 49

Primary 5 Maths (Term 2) 1 pt

A tank is $\frac{1}{5}$ full. 160 more litres of water is needed to fill it up completely.

What is the capacity of the tank?

Question 26 of 49

Primary 5 Maths (Term 2) 1 pt

Mrs Lim asked 24 cheese tarts and 32 strawberry tarts. What is the ratio of the number of strawberry tarts to the total number of tarts that Mrs Lim baked? Give your answer in simplest form

Question 27 of 49

Primary 5 Maths (Term 2) 1 pt

2 durians and 2 honeydews cost $96. A durian costs 3 times as much as a honeydew. How much does a honeydew cost?

Question 28 of 49 Primary 5 Maths (Term 2) 1 pt

What is the area of triangle ACD as shown in the figure below?

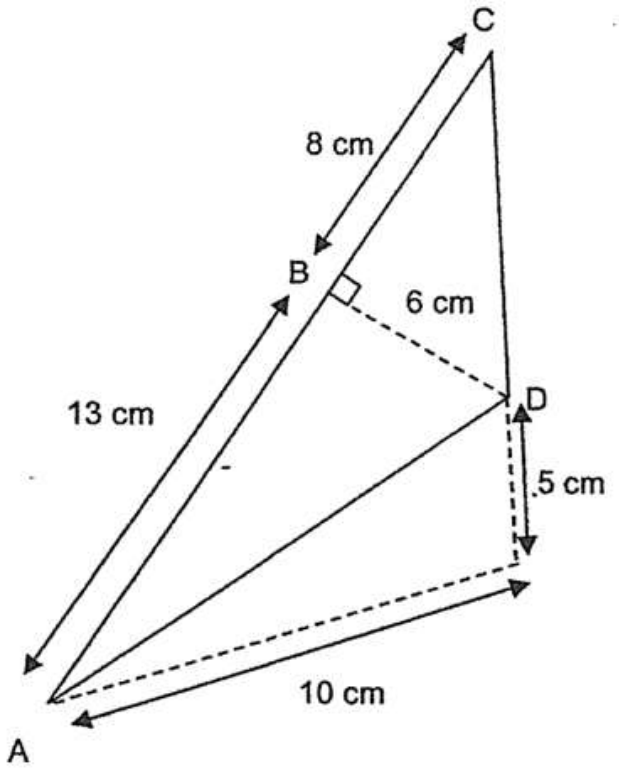

Question 29 of 49 Primary 5 Maths (Term 2) 1 pt

There were $\frac{1}{2}$ as many footballs as rugby balls in a room. After 36 footballs were added, there were $\frac{2}{5}$ as many rugby balls as footballs in the room. How many footballs were there in the end?

Question 30 of 49

Primary 5 Maths (Term 2) 1 pt

The figure below is not drawn to scale. A square based container 10 cm long and 24 cm high is $\frac{2}{3}$ filled with water. Find the volume of water in the container.

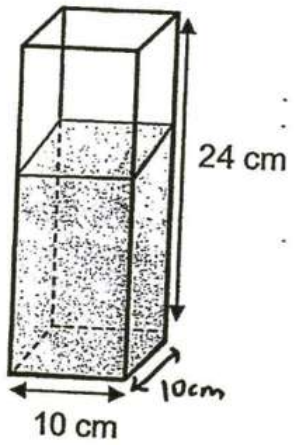

Question 31 of 49

Primary 5 Maths (Term 2) 1 pt

Heather has some balloons. $\frac{3}{5}$ of the balloons are red, $\frac{1}{3}$ of them are blue and the remaining balloons are yellow. If there are 56 more red balloons than yellow ones, how many red balloons does Heather have?

Question 32 of 49

Primary 5 Maths (Term 2) 1 pt

$\frac{2}{3}$ of the number of seats in a concert hall were occupied. After 50 people had left the concert hall, $\frac{1}{2}$ of the seats were still occupied. Find the total number of seats in the concert hall.

Question 33 of 49

Primary 5 Maths (Term 2) 1 pt

Mr Sim and his 4 children went to the theatre. The ratio of the price of each adult ticket to the price of each child ticket was 7:3. If Mr Sim spent $20 more on the 4 child tickets than the adult tickets, what was the price of each child ticket?

Question 34 of 49

Primary 5 Maths (Term 2) 1 pt

Mr Yeo is 35 years older than his son. How old will Mr Yeo be when he is 6 times as old as his son?

Question 35 of 49

Primary 5 Maths (Term 2) 1 pt

A rectangular piece of paper is folded to form the figure below. Find the area of the shaded figure BCDEF.

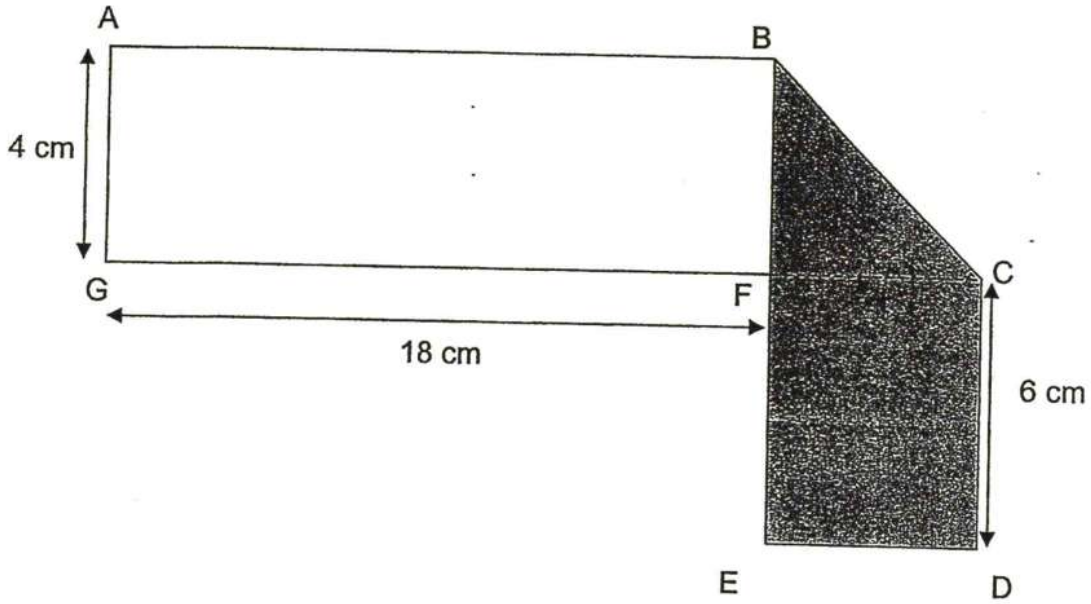

Question 36 of 49

Primary 5 Maths (Term 2) 1 pt

Mrs Tan had a total of 385 oranges and pears. She sold $\frac{1}{4}$ of her oranges and bought another 35 pears. As a result, she has an equal number of oranges and pears. How many oranges did she have at first?

Question 37 of 49

Primary 5 Maths (Term 2) 1 pt

At first, Bryan had 48 more erasers than Peter. After Bryan gave 62 erasers to Peter, the ratio of the number of erasers Bryan had to the number of erasers Peter had became 1:5. Find the number of eraser Bryan had at first.

Question 38 of 49

Primary 5 Maths (Term 2) 1 pt

Ginny spent \$55 on a pair of shoes and $\frac{1}{5}$ of the remaining money on a wallet. She had $\frac{2}{5}$ of her money left. How much did she have at first?

Question 39 of 49

Primary 5 Maths (Term 2) 1 pt

Jason and Kaden had 147 and 85 stickers respectively. Both of them gave an equal number of stickers away. Jason had 3 times as many stickers as Kaden in the end. How many stickers did each of them give away?

Question 40 of 49

Primary 5 Maths (Term 2) 1 pt

1 box of chocolates cost \$2. If David guys 8 boxes of chocolates, he only has to pay \$14. David has \$370. What is the greatest number of boxes of chocolates he can buy?

Question 41 of 49

Primary 5 Maths (Term 2) 1 pt

Amos bought a total of 100 pizzas and sandwiches for his birthday party. A pizza costs \$7 and a sandwich costs \$3. He paid \$552 in total. How many sandwiches did Amos buy?

Question 42 of 49 Primary 5 Maths (Term 2) 1 pt

Darren and Ethan had $600 altogether. After Darren spent $\frac{1}{4}$ of his money, he had $\frac{3}{8}$ as much money as Ethan.

(a) How much money had Darren left?

Question 43 of 49 Primary 5 Maths (Term 2) 1 pt

b) How much money did Ethan have than Darren in the end?

Question 44 of 49 Primary 5 Maths (Term 2) 1 pt

The number of stickers Andrew had to the number of stickers Vincent had was 9:5. After Vincent have away 44 stickers, the ratio of the number of stickers Andrew had tot the number of stickers Vincent had become 4:1. How many stickers did both of them have altogether in the end?

Question 45 of 49

Primary 5 Maths (Term 2) 1 pt

At first, Tank A measuring 35 cm by 25 cm by 48 cm was $\frac{2}{3}$ filled with water and Tank B was empty. Tank B has a square base of side 22 cm and height 30 cm. Tom then poured some water from Tank A to Tank B until Tank B was half-filled with water.

(a) How much water did Tom pour into Tank B?

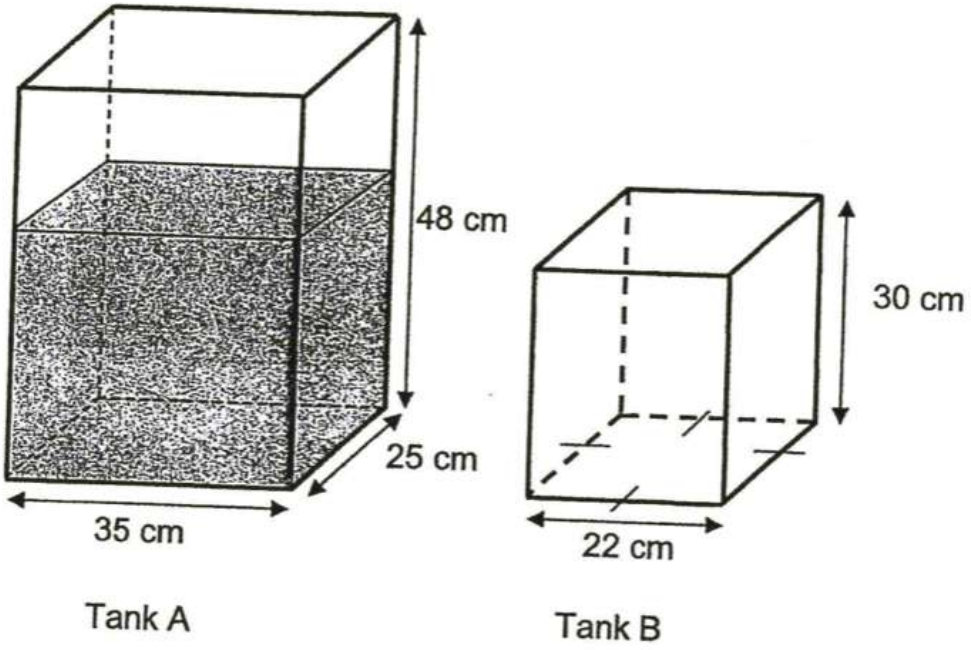

Question 46 of 49

Primary 5 Maths (Term 2) 1 pt

b) What is the volume of water left in Tank A?

Question 47 of 49

Primary 5 Maths (Term 2) 1 pt

The figure below, not drawn to scale, is made up of rectangle CDEF and square ABFG. Find the total shaded area.

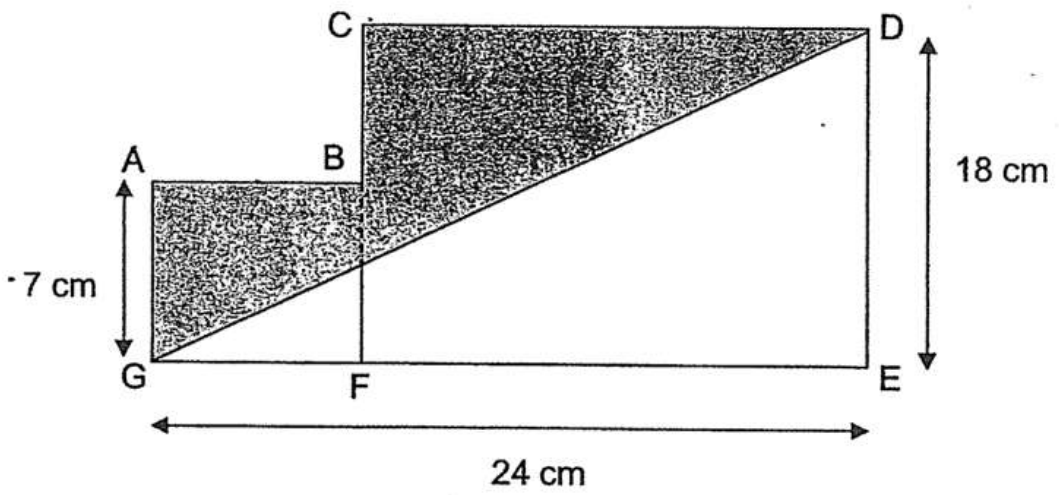

Question 48 of 49

Primary 5 Maths (Term 2) 1 pt

240 pupils attended the Primary 5 Adventure Camp.

$\frac{4}{5}$ of the boys and $\frac{2}{5}$ of the girls brought sleeping bags with them.

72 pupils did not bring sleeping bags.

How many boys attended the Primary 5 Adventure Camp?

Question 49 of 49

Primary 5 Maths (Term 2) 1 pt

Henry had 45 more balloons than Joe. After Henry gave Joe 110 balloons, Joe had 6 times as many balloons as Henry. How many balloons did Joe have at first?
